Wireless Netw
DOI 10.1007/s11276-016-1420-y

Two-stage decision making policy for opportunistic spectrum access and validation on USRP testbed

Rohit Kumar[1] · Sumit J. Darak[2] · Ajay K. Sharma[3] · Rajiv Tripathi[1]

Abstract "Recently, various paradigms, for instance, device-to-device communications, LTE-unlicensed and cognitive radio based on an opportunistic spectrum access (OSA) are being envisioned to improve the average spectrum utilization. In OSA, secondary (unlicensed) users (SUs) need decision making policies (DMPs) to identify and transmit over optimum frequency bands without any interference to the primary (licensed) users as well as minimize the number of collisions among SUs. In this paper, we have proposed a two-stage DMP consisting of Bayesian Multi-armed Bandit algorithm to accurately characterize the frequency band statistics independently at each SU and frequency band selection scheme for orthogonalization of SUs. The analytical and simulation results show that the proposed DMP leads to 45% improvement in the average spectrum utilization compared to 36–39% in the existing DMPs. Furthermore, the number of collisions are 58.5% lower in the proposed DMP making SU terminals energy-efficient. The performance of the proposed DMP has been verified on the proposed USRP testbed in real radio environment and the experimental results closely match the simulated results."

✉ Rohit Kumar
rohitkumar@nitdelhi.ac.in

[1] Electronics and Communication Engineering Department, National Institute of Technology Delhi, New Delhi, Delhi, India

[2] Electronics and Communication Engineering Department, Indraprastha Institute of Information Technology Delhi, New Delhi, India

[3] Computer Science and Engineering Department, National Institute of Technology Delhi, New Delhi, Delhi, India

Keywords Decentralized network · Dynamic spectrum learning and access · Opportunistic spectrum access · Multi-armed bandit · Decision making policy

1 Introduction

One of the main goal of next generation wireless communication network is to increase average utilization of an electromagnetic spectrum which is limited in nature. In addition, energy efficiency of such network entities including radio terminals should be as high as possible due to obvious factors such as cost, environmental concerns etc. Recently, various paradigms, for instance, device-to-device (D2D) communications, LTE-unlicensed and cognitive radio are being envisioned to achieve these goals [1–4]. These paradigms are based on opportunistic spectrum access (OSA) in which secondary (unlicensed) users (SUs) can use the temporarily unoccupied spectrum without any interference to the primary (licensed) users [3, 4]. Usually an opportunity, in OSA, is defined as: *a band of frequencies that are not being used by the primary users of that band at a particular time in a particular geographic area* [5]. Thus, to make OSA feasible in the dynamic environment, SU needs DMPs to characterize the frequency band statistics i.e. probability of vacancy and minimize the collisions among SUs. To manage the possible interference [6] and problem of the imperfect channel state information in the network, interference alignment and other techniques have been proposed in [7, 8].

The DMPs for OSA in the centralized networks [9–11] has been discussed in the literature. However, the main focus of this paper is on the decentralized networks. This is because, decentralized networks have significant importance in the next generation communication systems due to

Published online: 30 November 2016

advantages such as no communication overhead, lower complexity and ease of implementation along with their suitability for large size networks, public safety networks etc. [4]. In the OSA in the decentralized networks, DMPs are required for: (1) Facilitating the SUs for identification of optimum vacant frequency bands, (2) Minimization of number of collisions among SUs, and (3) Minimization of the frequency band switching cost. The frequency band switching prevails when a SU switches from one to other frequency band and the cost associated with it in terms of power, delay, hardware reconfiguration and protocol overhead is coined as frequency band switching cost.

The design of DMPs for single user decentralized networks is straightforward due to direct application of multi-armed bandit (MAB) algorithms and reader can refer to [12–15] for more details. Design of DMPs for multi-user decentralized networks is a non-trivial problem [3, 4, 16–21]. This is because, SUs do not share any information in the decentralized networks which often leads to inaccurate characterization of the frequency band statistics and frequent collisions among SUs especially when the number of SUs are large. The design of DMP for such decentralized networks is the motivation behind the work presented in this paper.

Recently, there has been some progress in the design of DMPs for the decentralized networks as discussed in more details later in Sect. 2. A well-known approach is to use past sensing events to accurately characterize the frequency band statistics while the frequency band selection scheme either follows randomization approach or prediction approach to identify distinct frequency band for each SU. For an efficient DMP, algorithm characterizing the frequency band statistics should be accurate and Upper Confidence Bound (UCB) algorithms are preferred [22–24]. However, the performance of other MAB algorithms for OSA in the multi-user decentralized networks has not been studied in detail in the literature. In case of frequency band selection scheme, there is a need of two-stage approach in order to allow MAB to explore all frequency bands without affecting the average spectrum utilization. Furthermore, the number of collision among SUs should be minimal in order to increase the energy-efficiency of SU terminals. This is is consequence of SUs spending significant amount of battery capacity to process and transmit the data. The existing literature is perhaps not mature enough to provide solutions for these problems and hence, the design of such DMPs need to be explored.

In this paper, a new two-stage DMP has been proposed for OSA in the multi-user decentralized networks. The proposed DMP is inspired from the DMP in [3] and is significantly novel due to following contributions.

1. The proposed DMP is based on the Bayesian MAB algorithm, named Bayes-UCB (BUCB) algorithm, compared to [3] which uses frequentist approach based UCB algorithm. The algorithm selection is inspired from the recent results which show that the performance of UCB algorithm is inferior to that of BUCB algorithm especially in online recommendation applications [24, 25].
2. The proposed DMP is a two-stage DMP while most of the existing DMPs [23, 24, 26] are single stage. Design of two-stage DMP is not a straightforward extension of single-stage DMP and sufficient care needs to be taken to minimize the number of collisions among SUs. This is achieved by forming two subsets of frequency bands based on their characterized statistics.
3. We have provided the theoretical bounds on the performance of the proposed DMP.
4. The analytical and simulation results indicate that our proposed DMP leads to 45% improvement in the average spectrum utilization compared to 36–39% in the existing DMPs [23, 24, 26]. Also, the number of collisions are 58.5% lower in the proposed DMP making SU terminals energy-efficient.
5. The performance of the proposed DMP has been verified on the proposed USRP testbed in real radio environment and the experimental results closely match the simulated results. Simulation and experimental results also show that frequency band sensing errors do not have significant effect on the performance of DMPs.

The remaining part of this paper is structured as follows. Section 2 consists the related work. Section 3 contains the proposed DMP followed by proposed USRP testbed in Sect. 4. Simulation and experimental results are presented in Sects. 5 and 6, respectively followed by conclusions and future works in Sect. 7.

2 Related work

In the decentralized networks, DMPs consist of two main tasks: (1) Characterization of the frequency band statistics, and (2) Frequency band selection. In the next sub-sections, we review the work done related to these two tasks.

2.1 Characterization of frequency band statistics

The classical MAB problem for a single player was first introduced by Lai and Robbins [27] in a non-Bayesian setting. This model discusses the essence of the MAB problem that a player faces in an unknown environment, where the player must not only explore to learn but also

exploit to maximize the reward by choosing the best frequency band. Agrawal in [28] proposed a sample mean based index DMP that asymptotically achieved logarithmic regret which means that the algorithm is asymptotically optimal. Here, regret refers to the loss of data transmission opportunities with respect to genie-aided DMP. Later on, Auer et al. introduced simple index-based asymptotically optimal algorithms, UCB1 and UCB2 in [23]. Since then UCB and it extensions have been used popularly. Recently, Bayesian MAB algorithm, BUCB [24] has been proved to have better regret and lower complexity than UCB like algorithms. Furthermore, empirical observations show that the BUCB algorithm offers fewer number of frequency band switchings [4]. Please refer to Sect. 3 for more details.

2.2 Frequency band selection

The purpose of the frequency band selection is to orthogonalize SUs to the optimum frequency bands i.e., the group of frequency bands having better statistics than the rest according to MAB algorithm. The task of selection of such frequency band for the data transmission is challenging especially in the decentralized network where probability of collision among the existing SUs is high. For minimization of the number of collisions, in DMP, ρ^{RAND} [3], each SU, j is randomly assigned a rank $R(j) \in \{1, 2, \ldots, U\}$. Here, U indicates the number of active SUs in the network. In the subsequent time slots, SU with rank, $R(j)$, selects the frequency band with the $R(j)$th best quality index based on the characterization by underlying UCB algorithm. When SUs collide, the rank is randomly and independently re-calculated at colliding SUs. A DMP, time division fair access (TDFS)[17], is similar to ρ^{RAND} except that the rank is rotated in round robin fashion between 1 and U in each time slot to give an equal opportunity to access the optimum frequency bands to all SUs. Both DMPs have been proved to have logarithmic regret and hence, asymptotically optimal indicating that SUs eventually settles into different frequency bands. However, frequency band switching cost of the TDFS [17] is high in comparison to ρ^{RAND} [3] because it increases linearly with the number of time slots in TDFS [17] compared to ρ^{RAND} where rank and hence, frequency band changes only when collision occurs. Hence, ρ^{RAND} is preferred when high penalty is incurred due to frequency band switching. Another DMP, Distribute Learning Algorithm with Fairness (DLF) based on ρ^{RAND} [3] and TDFS [17] is proposed in [19, 20] taking in to account the upper as well as lower bound on the estimated frequency band statistics leading to superior performance compared to ρ^{RAND} [3] and TDFS [17]. The number of collisions are further minimized in [18] by using the range for the rank i.e. $1 \leq R(j) \leq C, \forall j$. Here C denotes the number of frequency bands in the network. However, this DMP incurs higher regret for smaller U because of the selection of sub-optimal frequency bands. Taking tunable bandwidth requirements of SUs into the account, variable filtering architecture integrated with the tunable frequency band access DMP, ρ^{t-rand} has been proposed in [29]. However, all these DMPs are single-stage which means that SUs need to wait till next time slot if the chosen frequency band is observed as occupied. In [30], a two-stage DMP for the centralized network is proposed where SUs sense two frequency bands sequentially in a single time slot and access the potentially unused frequency bands while the focus of the proposed work is on the decentralized network.

3 Proposed two-stage decision making policy

In this section, details of the proposed DMP is presented. As shown in Fig. 1, each time slot is splitted into three sub-slots. In the sub-slot 1 of time slot t, at the jth SU, the proposed DMP selects the frequency band as per Rank1, R_{j1} and senses it using the spectrum detector. Here, R_{j1} can take any integer value between 1 and U, i.e., $R_{j1} \in \{1, 2, \ldots, U\}$. If the selected frequency band is vacant, SU transmits data on the selected frequency band in the remaining time space (i.e., sub-slot 2 + sub-slot 3). If the selected frequency band in sub-slot 1 is occupied, then the proposed DMP selects another frequency band as per Rank2, R_{j2}. Here, R_{j2} can take any integer value between $(U+1)$ and $min(2U, C)$, i.e., $R_{j2} \in \{U+1, \ldots, min(2U, C)\}$. If the selected frequency band in sub-slot 2 is vacant, SU transmits data on the selected frequency band in the sub-slot 3. Otherwise, SU remains idle until the beginning of next time slot. To begin with, network model is explained in the next sub-section.

3.1 Network model

The decentralized network considered in this paper consist of U SUs, $j \in \{1,2,...,U\}$ and wideband input spectrum consisting of C uniform bandwidth frequency bands, where $C > U$. Status of the frequency band at time slot t can be either vacant or occupied. We assume that the state 1 (vacant) or 0 (occupied) of each frequency band is evolved as a stationary Bernoulli random process across the time slots with an unknown mean. In this paper, it is assumed that the status of each frequency band is independent of the status of other frequency bands as well as its status in previous time slots. This means that the frequency band statistic i.e., probability of frequency band, i being vacant, is governed by some mean $\mu(i) \in [0,1]$ which is unknown

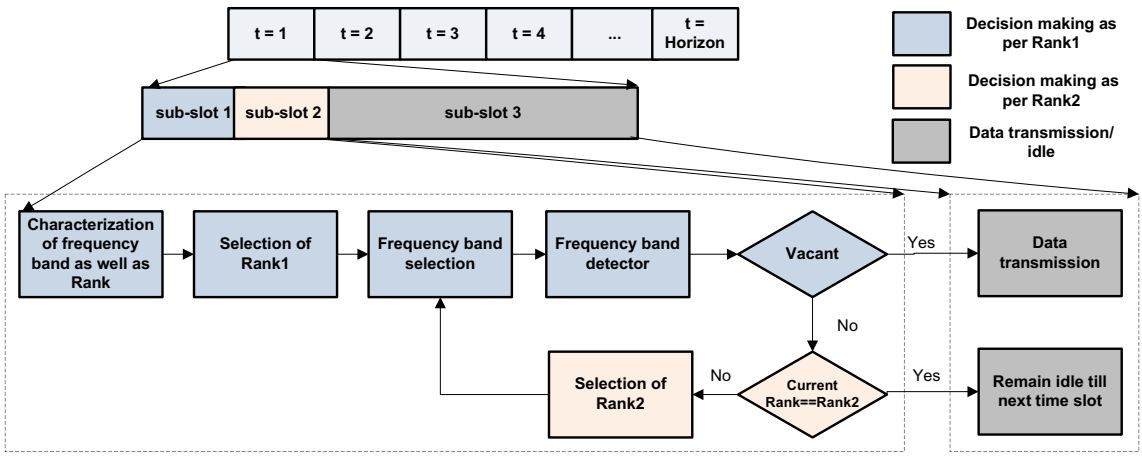

Fig. 1 The decision making framework of the proposed DMP

to SUs. Let $\mu = [\mu(1), \mu(2), \ldots, \mu(C)]$ denote the frequency band availability statistics.

In each time slot, every SU chooses the frequency band for data transmission. Let the frequency band chosen by jth SU in sub-slot 1 and sub-slot 2 of time slot t be $N_{j1}(t)$ and $N_{j2}(t)$, respectively. In single-stage DMP, if the chosen frequency band is occupied, then SUs need to wait till next time slot for the data transmission. But in case of two-stage DMP, SU can choose one more frequency band. It is considered that SU transmits over the chosen frequency band if it is sensed as vacant whereas if multiple SUs transmit over the same frequency band, collision occurs and transmission is not successful for colliding SUs. Otherwise, it is assumed that data transmission is successful.

Let $S^*(t)$ and $S(t)$ be the expected total number of successful transmissions by genie-aided DMP and the underlying DMP, respectively. Genie-aided DMP refers to the DMP where frequency band statistics are known in advance and there is no collision among SUs. We assume that the SU receives a reward 1 and γ (≤ 1) if it successfully transmits on the selected frequency band in the first and second stage, respectively. In the second stage, a SU is given reward γ, $0 \leq \gamma < 1$ as the total time available for the data transmission in second stage is lower than the first stage. Then, total regret of the given DMP at any time slot t which refers to loss of data transmission opportunities in comparison to genie-aided DMP is given by [3]:

$$R(t) = S^*(t) - S(t) \tag{1}$$

i.e.

$$R(t) = \sum_{j=1}^{U} t\mu(j) - \mathbb{E}\left\{ \sum_{v=1}^{t} \sum_{j=1}^{U} Z_{\varphi_j(v),j}(v) \cdot V_{i,j}(v) \cdot \{d_j(v) - \gamma[d_j(v) - 1]\} \right\} \tag{2}$$

where

$$d_j(v) = \begin{cases} 1 & Z_{N_{j1}(v),j}(v) = 1 \\ 0 & Z_{N_{j1}(v),j}(v) = 0 \end{cases} \tag{3}$$

$$Z_{N_{j1}(v),j}(v) = \begin{cases} 1; & N_{j1}(v) \quad \text{is free} \\ 0; & N_{j1}(v) \quad \text{is occupied} \end{cases} \tag{4}$$

$$\varphi_j(v) = \begin{cases} N_{j1}(v) & d_j(v) = 1 \\ N_{j2}(v) & d_j(v) = 0 \end{cases} \tag{5}$$

Note that, for simplicity, we have assumed that $\mu(1) \geq \mu(2) \geq \mu(3) \geq \cdots \geq \mu(C)$. Also, $V_{i,j}(t) = 1$ if the jth SU is the sole user of vacant frequency band i in time slot t, otherwise 0. The first term in Eq. 2 indicates total expected reward of the decentralized network after t time slots due to successful transmissions in the ideal scenario i.e. when frequency band statistics are known a priori. The second term indicates total expected reward of the decentralized network after t time slots due to successful transmissions either in the first or second stage. In case of non-ideal detectors with the probability of detection and false alarm as P_d and P_{fa} respectively, we can re-write Eq. 2 as:

$$R(t) = \sum_{j=1}^{U} (1 - P_{fa}) t\mu(j) - \mathbb{E}\left\{ \sum_{v=1}^{t} \sum_{j=1}^{U} Z_{\varphi_j(v),j}(v) \cdot V_{i,j}(v) \cdot \{d_j(v) - \gamma[d_j(v) - 1]\} \right\} \tag{6}$$

In addition to regret, number of collisions, $C(t)$ at any time slot t is given by an indicator function[1] and should be as minimum as possible.

$$C(t) = \mathbb{E}\left[\sum_{v=1}^{t} \sum_{j=1}^{U} \mathbf{1}_{(\varphi_j(v) = \varphi_p(v), p \in (j+1, U))} \right] \tag{7}$$

[1] Indicator function: $\mathbf{1}_{\{logicalexpression\}} = 1$ if logical expression = true; else 0.

3.2 Proposed DMP framework

In this section, the proposed two-stage DMP for the decentralized network consisting of U SUs and C uniform bandwidth frequency bands is presented. The proposed DMP at any jth SU is given in Algorithm 1. Please refer to Table 1 for the definitions of all symbols used throughout the paper including Algorithm 1.

In the beginning, each frequency band is sensed once by each SU and the parameters $X_{N_{j1}(t),j}(t)$ and $T_{N_{j1}(t),j}(t)$ are updated as per steps 1–7 of Algorithm 1. In each subsequent time slots ($t > C$), quality index, $q(i, t)$, $\forall i$ is calculated for each frequency band using BUCB algorithm as shown in steps 12–14 of Algorithm 1. This index is calculated with the help of quantile of order i for a given beta distribution as per the following equation [24]:

$$q(i,t) = Q\left\{1 - \frac{1}{t}; Beta[X_{i,j}(t) + 1, T_{i,j}(t) - X_{i,j}(t) + 1]\right\} \tag{8}$$

where $Q(x)$ is the probability that any normal random variable gets a value larger than x standard deviations above the mean and *Beta* represents the complete beta function, i.e., Euler integral of the first kind. Higher the value of quality index, higher is the probability that corresponding frequency band is vacant. Hence, the SU chooses the frequency band $N_{j1}(t)$ having R_{j1}^{th} maximum value of quality index as shown in Step 15. The chosen frequency band is then sensed by spectrum detector. Based on the sensing outcome, parameters $X_{N_{j1}(t),j}(t)$ and $T_{N_{j1}(t),j}(t)$ are updated as shown in Steps 16–19. Note that, $X_{i,j}(t) \leq T_{i,j}(t)$, $\forall i, \forall j$. If the frequency band, $N_{j1}(t)$ is occupied by primary user, then proposed DMP allows SU to choose another frequency band, $N_{j1}(t)$, using the rank, R_{j2}^{th}, as shown in Step 12. Also, $d_j(t) = 1$ when $N_{j1}(t)$ is occupied, otherwise 0. Based on the sensing outcome, parameters $X_{N_{j2}(t),j}(t)$ and $T_{N_{j2}(t),j}(t)$ are updated as shown in Steps 23–27. In this way, the proposed DMP uses BUCB algorithm for frequency band characterization and selection.

Table 1 Notations and definitions

Notations	Definitions
U	No. of SUs in the decentralized network, $j\forall\{1, 2, \ldots, U\}$
C	No. of frequency bands, $i\forall\{1, 2, \ldots, C\}$
t	Current time slot, $v\forall\{1, 2, \ldots, t\}$
H	Horizon
$\mu(i)$	Probability of vacancy of frequency band i
$\mu(j^*)$	$\{j^*\}$th highest value of μ
$R_{j1}(k)$	Rank1 of jth SU
$R_{j2}(k)$	Rank2 of jth SU
$N_{j1}(t)$	Frequency band chosen by jth SU in the first sub-slot
$N_{j2}(t)$	Frequency band chosen by jth SU in the second sub-slot
$S(t)$	Total reward (i.e., throughput) of the two-stage DMP
$S^*(t)$	Total reward (i.e., throughput) of the two-stage genie aided DMP
$R(t)$	Total regret (i.e., loss in throughput) of the two-stage DMP
$R_{st}(t)$	Total regret (i.e., loss in throughput) of the single-stage DMP
$d_j(t)$	Indicate the vacancy status of $N_{j1}(t)$
$Z_{i,j}(t)$	Vacancy status of frequency band i chosen by jth SU in time slot t
$V_{i,j}(t)$	Collision status over frequency band i chosen by jth SU in time slot t
γ	Reward reduction factor for second stage
$C(t)$	Number of collisions up to time slot t
$q(i, t)$	Quality index of frequency band i in time slot t using BUCB algorithm
$T_{i,j}(t)$	Number of times frequency band i chosen by jth SU up to time slot t
$X_{i,j}(t)$	Total reward gained by jth SU over the frequency band i up to time slot t
$M_{b(t)}$	Total number of SU collisions over U-best frequency bands having U-highest mean availability
$M_{w(t)}$	Number of SU collisions when frequency band is chosen using the rank, R_{j2}
P_{avail}	Probability of availability of the frequency band
P_d	Probability of detection
P_{fa}	Probability of false alarm

If SU experiences collision on the selected frequency band and $d_j(t) = 1$, then the corresponding rank, R_{j1} is randomnly and independently updated at jth SU as shown in steps 28–30. The range of the rank, R_{j1}, in the proposed DMP is same as that in existing single stage DMPs [3, 17, 31]. However, the range of the rank, R_{j2}, is different as shown in Step 32.

Next, the motivation behind the selection of BUCB algorithm instead of UCB, KL-UCB algorithms etc. is discussed. In MAB application scenario with single SU decentralized network, any frequency band characterization and selection algorithm must satisfy following condition.

$$\limsup_{t\to\infty} \frac{\mathbb{E}[T_{i,j}(t)]}{\ln t} = \frac{\beta}{KL(\mu(i), \mu(i^*))}, \ \forall i, \forall j \tag{9}$$

where KL represents the Kullback–Leibler divergence and $\beta \leq 1$. For asymptotically optimal MAB algorithm, $\beta = 1$. It has been proved analytically that the BUCB algorithms offer higher value of β than other MAB algorithms which means that the regret bounds of BUCB algorithm are superior than that of existing algorithms. Another advantage of BUCB algorithm is that BUCB selects the same frequency band consecutively more frequently than the other algorithms. This characteristic can also be used for proper estimation of the transition probabilities when frequency band statistics

Algorithm 1: Frequency band characterization and selection using Bayes-UCB algorithm for j^{th} secondary user

Parameters: $C, U, i \in \{1,2,..,C\}, j \in \{1,2,..,U\}, R_{j1}, R_{j2}, H$
Input: $X_{i,j}(t-1), T_{i,j}(t-1)\ \forall i$
Output: $X_{i,j}(t), T_{i,j}(t), N_{j1}(t), N_{j2}(t)\ \forall i$

1. **for** $t=1$ **to** C **do**
2. **if** any frequency band not chosen once
3. $N_{j1}(t) = i$ s. t. $T_{i,j}(t-1) = 0$
4. **if** $N_{j1}(t)$ is vacant
5. Increment $X_{N_{j1}(t),j}(t)$ by 1
6. **end**
7. Increment $T_{N_{j1}(t),j}(t)$ and t by 1
8. **else**
9. **for** $t = C + 1$ **to** H **do**
10. $X_{:,j}(t) = X_{:,j}(t-1)$
11. $T_{:,j}(t) = T_{:,j}(t-1)$
12. **for** $i = 1$ **to** C **do**
13. Compute quality index $q(i,t)$ using Eq. 8
14. **end**
15. Select the band $N_{j1}(t) = i$ s.t. $q(i,t)$ is R_{j1}^{th} max. value of $q(:,t)$
16. **if** $N_{j1}(t)$ is vacant
17. Increment $X_{N_{j1}(t),j}(t)$ by 1
18. $d_j(t)$= 1
19. **else**
20. $d_j(t)$= 0
21. Increment $T_{N_{j1}(t),j}(t)$ by 1
22. Select the band $N_{j2}(t) = i$ s.t. $q(i,t)$ is R_{j2}^{th} max. value of $q(:,t)$
23. **if** $N_{j2}(t)$ is vacant
24. Increment $X_{N_{j2}(t),j}(t)$ by γ
25 **end**
26. Increment $T_{N_{j2}(t),j}(t)$ by 1
27. **end**
28. **if** collision occurs
29. **if** $d_j(t)$==1
30. R_{j1} = *rand(1, U)*
31. **else**
32. R_{j2} = *rand(U+1,min(2U,C))*
33. **end**
34. **end**
35. **end**
36. **end**
37. **end**

follow Markovian model. However, utility of transition probabilities for DMP is beyond the scope of this paper.

3.3 Regret bounds under proposed DMP

The proposed DMP is an integration of BUCB algorithm with the proposed two-stage rank based frequency band selection approach. Thus, the optimality of just BUCB algorithm is not sufficient to prove the superiority of the proposed DMP. In this section, upper and lower bounds on the regret of the proposed DMP are derived and compared with existing single stage DMP.

For ease of analysis, spectrum detector is considered as perfect, i.e., no sensing error and $\mu(1) \geq \mu(2) \geq \mu(3) \geq \cdots \geq \mu(C)$. For any single-stage DMP for decentralized network, lower and upper bounds on regret, $R_{st}(t)$, satisfy the following conditions [3]:

$$R_{st}(t) \geq \sum_{j=1}^{U} \sum_{i=U+1}^{C} [\mu(j) - \mu(i)] \cdot \mathbb{E}[T_{i,j}(t)] \tag{10}$$

$$R_{st}(t) \leq \left\{ \left[\sum_{j=1}^{U} \mu(j) \sum_{i=U+1}^{C} \mathbb{E}[T_{i,j}(t)] \right] + \mathbb{E}[M_b(t)] \right\} \tag{11}$$

where $T_{i,j}(t)$ denotes the number of times frequency band, i, has been selected by jth SU up to time slot t and $M_b(t)$ denotes the total number of SU collisions over the subset of frequency bands having U highest mean availability, i.e. μ. The subset of remaining frequency bands are referred to as U-worst frequency bands.

Equation 10 gives the lower bound on the regret caused by selection of the U-worst frequency band. The term $\mathbb{E}[T_{i,j}(t)]$ in Eq. 10 represents the total time elapsed by any SU, $j = 1, \ldots, U$, in any $i \in U$-worst frequency band. The first term in Eq. 11 refers to the loss of transmission opportunities because of the selection of U-worst frequency band, while the second term refers to the performance loss because of the collisions among the active SUs in the U-best frequency bands. The upper bound of first term depends on BUCB algorithm and is given by [24],

$$\mathbb{E}[T_{i,j}(t)] \leq \sum_{k=1}^{U} \left[\frac{8.ln(t)}{\triangle(i,k^*)^2} + 1 + \frac{\pi^2}{3} \right] \tag{12}$$

Here, $\triangle(i,j) = \mu(i) - \mu(j)$. Hence, for OSA in a multiuser decentralized network, minimization of number of collisions, $M_b(t)$ in Eq. 11, among active SUs is important in addition to the accurate estimation of frequency band statistics.

For the proposed two-stage DMP, lower bound on the regret, $R(t)$, is given by

$$R(t) \geq R_{st}(t) - \gamma \cdot \sum_{j=1}^{U} \sum_{i=U+1}^{C} \mu(i) \cdot \mathbb{E}[T_{i,j}(t)] \cdot (1 - \mu(j)) \tag{13}$$

where the second term refers to the total reward received when frequency band chosen in the first stage is occupied and hence, SU selects another frequency band using the rank, R_{j2}. It can be observed from Eqs. 11 to 13 that the lower bound of the proposed DMP is better than single-stage DMP as long as γ is sufficiently high. Next, the upper bound on regret, $R(t)$, in the proposed two-stage DMP can be given as,

$$R(t) \leq R_{st}(t) - \left\{ \left[\gamma \sum_{j=1}^{U} (1 - \mu(j)) \sum_{i=U+1}^{C} \mu(i) \cdot \mathbb{E}[T_{i,j}(t)] \right] + \mathbb{E}[M_w(t)] \right\} \tag{14}$$

where the first part of the second term indicates the total reward received when frequency band chosen in the first stage is occupied and hence, SU selects another frequency band using the rank, R_{j2} and $M_w(t)$ indicates the number of collisions experienced by SUs when it chooses the frequency band using the rank, R_{j2}. From Eq. 14, it can be observed that the upper bound on regret in the proposed DMP, $R(t)$, is better than $R_{st}(t)$ if and only if

$$\mathbb{E}[M_w(t)] < \sum_{j=1}^{U} \sum_{i=1}^{U} \mathbb{E}[T_{i,j}(t)](1 - \mu(i)) \tag{15}$$

Here, the second term refers to the number of times the frequency band from U-best frequency band are observed as occupied. This term is always greater than $\mathbb{E}[M_w(t)]$ as long as μ corresponding to U-worst frequency bands are non-zero. Otherwise, $R(t) = R_{st}(t)$ which also mean that $\mathbb{E}[M_w(t)] = 0$.

4 Proposed USRP testbed

The proposed USRP testbed is demonstrated in Fig. 2 which is a significant up-gradation of the testbed depicted in [31]. It is divided into two parts: (1) Left part consists of primary user traffic generator and (2) Right part consists of decision making policy (DMP) for secondary users.

4.1 Primary user traffic generator

The primary user traffic has been generated in the environment of GNU Radio Companion (GRC) whereas the hardware platform comprises of X310 USRP boards from Ettus Research. The precise control of GRC on every

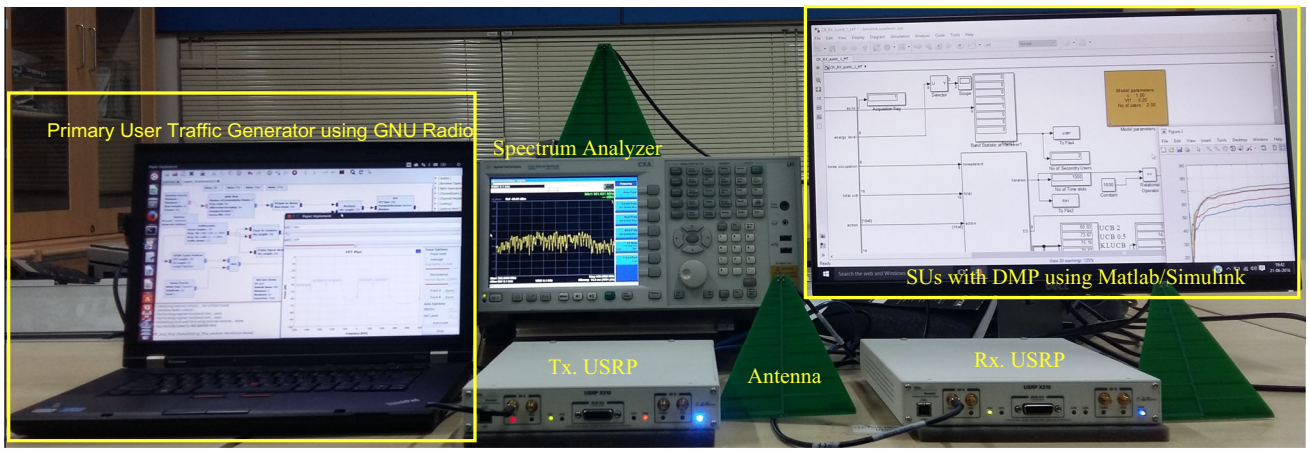

Fig. 2 Proposed USRP based testbed for analysis of the performance of DMPs using real radio signals and non-ideal spectrum detectors

parameter of the transmission chain in comparison to the other environment is the main reason for its selection to generate the primary user traffic. [31] can be referred for more implementation details.

4.2 Decision making DMP for secondary users

Matlab/Simulink and X310 USRP boards from Ettus Research have been chosen as the design environment for the SU terminal.The USRP on the receiver side is tuned such that it can receive the signals of bandwidth 1 MHz centred at 433.5 MHz, the frequency at which signal has been transmitted from the USRP on the transmitter side. After receiving the signal, it is down-sampled and then digitized. After that, it is passed to the decision making stage consisting of the spectrum detector and decision making policy implemented using simulink.

The illustrative version of the proposed simulink model for SUs with baseband processing sub-system is shown in Fig. 3 and detailed model of the baseband sub-system in Fig. 3 is shown in Fig. 4. As shown in Fig 3, signal received on 256 sub-carries is averaged over the symbol interval and passed to the baseband sub-system which consists of synchronization unit, spectrum detector and various DMPs. The outputs of the baseband sub-system are processed in order to display and stored them in the desired form for result analysis.

The first task of the baseband sub-system is to synchronize the transmitter and receiver. This synchronization is done by switching the first frequency band from vacant to occupied state or vice-versa in each time slot by the transmitter. Transitions between the OFDM symbols can be detected by the SUs with the help of such deterministic transitions. In addition, synchronization of the energy detection phase can also be achieved on an entire OFDM symbol of the primary traffic with such deterministic transitions. Though existing synchronization mechanism does not affect the performance of the DMP, the design of an efficient synchronization mechanism is a part of ongoing work.

The detailed version of DMP sub-system of baseband is shown on the right hand side of Fig. 4. For clarity purpose, only single DMP with energy detector is shown. The sensing errors may occur [32] as the selected energy detector is non-ideal. It is considered that SU transmits over the selected frequency band if it is sensed as vacant, whereas if multiple SUs select the same frequency band, then all such users are considered to suffer collision and thus unable to transmit any data. In case of multiple SUs in the network, each SU is implemented in simulink independently with their respective DMP. Moreover, the assumption of perfect sensing in the existing literature is a false notion in real radio conditions. Thus, with the help of our proposed USRP testbed consisting the non-ideal spectrum detectors, the performance of different DMPs can be analysed in presence of sensing errors.

5 Simulation results and analysis

In this section, we present the simulation results to evaluate and compare the proposed DMP with the ρ^{RAND} [3] and DLF [19, 20] in terms of number of collision free transmissions and number of collisions. Since the performance of TDFS [17] is observed to be close to that of ρ^{RAND} and also the performance of DLF has been proved better than TDFS in [20] , TDFS is not included in the comparison for clarity of the plots. Furthermore, to analyse the effect of MAB algorithms on the performance of DMP, new DMPs have been designed by replacing the UCB algorithm used in ρ^{RAND} with the KLUCB and BUCB algorithms. All the simulations are carried out using the Matlab and add-on

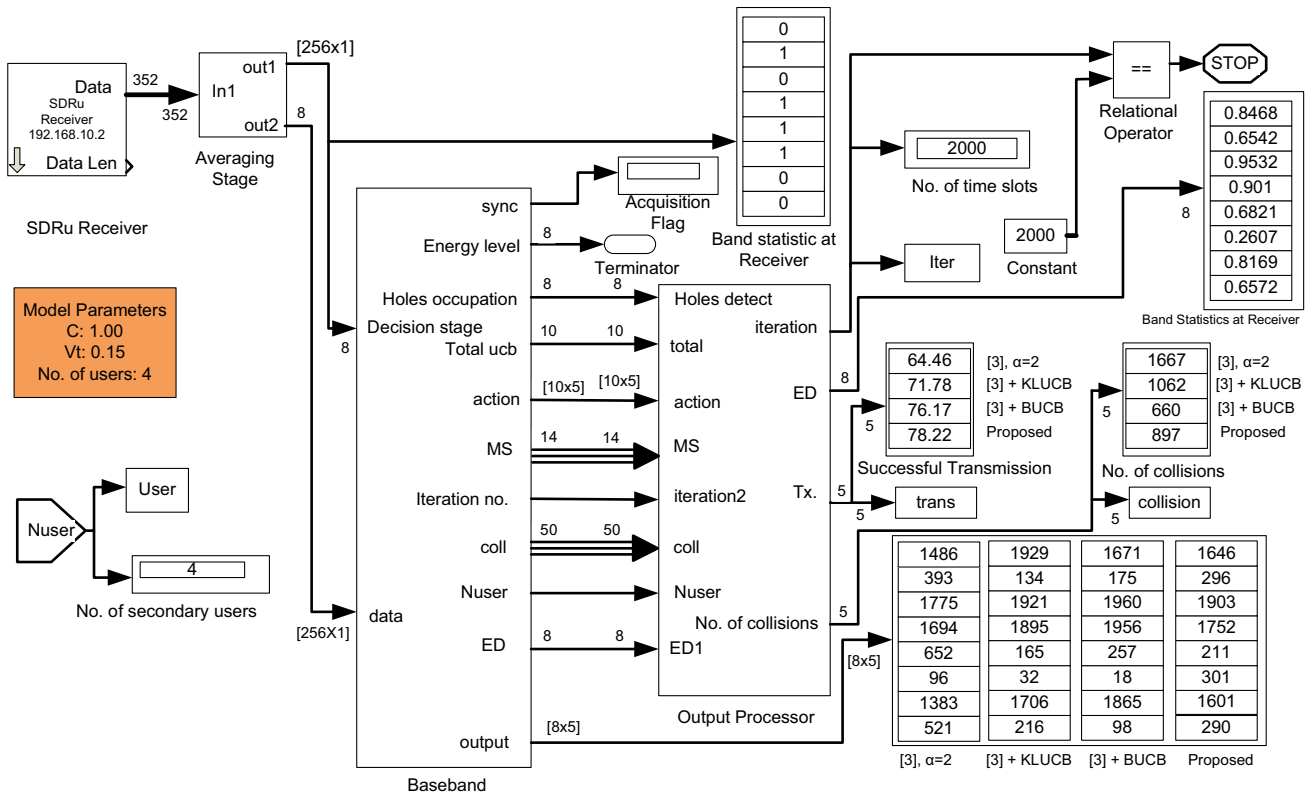

Fig. 3 Equivalent model of the proposed SU transceiver implemented using Simulink

toolboxes including Communications System Toolbox and Global Optimization Toolbox. Energy detector is assumed as non-ideal and implemented via statistical models for given probability of detection and probability of false alarms. The simulation parameters we have considered are $C = 8$ and $U = 4$ with four distinct cases of different combinations of the probability of availability of the frequency bands, P_{avail}, and the probability of detection, P_d.

1. *Case 1* P_{avail}: [0.20 0.30 0.80 0.70 0.50 0.10 0.60 0.40] and $P_d = 0.95$
2. *Case 2* P_{avail}: [0.15 0.45 0.05 0.65 0.25 0.85 0.35 0.75] and $P_d = 0.95$
3. *Case 3* P_{avail}: [0.20 0.30 0.80 0.70 0.50 0.10 0.60 0.40] and $P_d = 0.75$
4. *Case 4* P_{avail}: [0.15 0.45 0.05 0.65 0.25 0.85 0.35 0.75] and $P_d = 0.75$

Probability of false alarm, P_{fa}, is fixed and equal to 0.05. All the SUs implement the same DMP without any information exchange among them. Each numerical result shown in the analysis is obtained after averaging the values over 10 independent experiments and simulations over a time horizon of 10,000 iterations.

The plots for comparison of collision free transmissions in [3] with UCB, BUCB and KLUCB algorithms, the proposed DMP and DLF [19, 20] are shown in Figs. 5 and 6. Figure 5(a), (b) show the number of collision free transmissions in % with respect to genie-aided DMP for $U = 2$ and $U = 4$, respectively. Note that the solid lines correspond to Case 1 while marker corresponds to Case 3. Similarly, for different frequency band distribution, Fig. 6(a), (b) show the number of collision free transmissions in % with respect to genie-aided DMP for $U = 2$ and $U = 4$, respectively. Note that solid lines correspond to Case 2 while marker corresponds to Case 4. From Figs. 5 and 6, it can be observed that the number of collision free transmissions in DMPs using KLUCB [26] and BUCB [4, 24] algorithms are almost same but they offer superior performance than that of UCB based DMP [3] and the DLF [19, 20]. Also, DLF [19, 20] offers higher number of collision free transmissions than ρ^{RAND} using UCB based DMP [3]. Furthermore, the proposed DMP outperforms all the existing DMPs in all the cases. Furthermore, sensing errors do not have significant effect on the performance of DMPs since the plots with different values of P_d for a given P_{avail} are almost overlapping. This is important since the sensing errors depend on the type of detectors, environmental conditions etc. and the DMP should be immune to these factors.

Next, number of collision free transmissions in % w.r.t. genie-aided DMP averaged for $U = \{1, 2, 3, 4\}$ are shown in Fig. 7(a). It can be observed that the proposed DMP

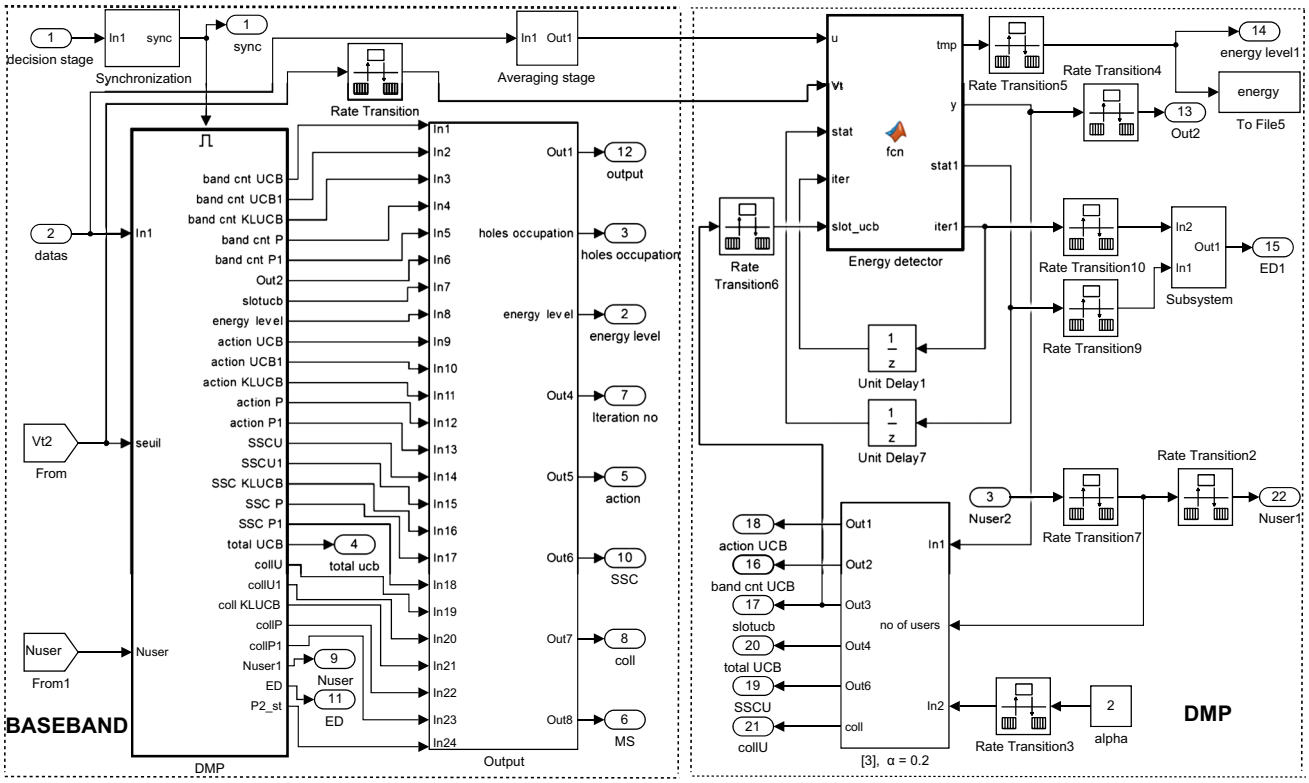

Fig. 4 Implementation details of spectrum detector and DMP in Simulink

outperforms all the existing DMPs for all the cases. Since the regret bounds of BUCB algorithm are superior than that of other existing algorithms and it selects the same frequency band consecutively more frequently than the other algorithms, it can also be observed that the DMPs using Bayesian MAB algorithm i.e. [3] using BUCB as well as the proposed DMP offer higher number of collision free transmissions proving it a superior choice over UCB algorithm for OSA in multi-user decentralized networks. Numerically, average spectrum utilization because of the primary users was only 55%. DMP in [3] using UCB, BUCB, KLUCB, DLF and the proposed DMP have increased spectrum utilization to 75, 77, 76.7, 76 and 81% respectively. This means that improvement in average spectrum utilization because of the proposed DMP is 9% more than that due to [3]. One of the reason for superior performance of the proposed policy is the two stage approach which offers higher number of transmission opportunities. Another reason is the clustering of frequency bands for first access and second access in order to maximize the number of successful transmission in the first access. However, higher the number of transmission attempts, higher is the probability of collisions among SUs.

In Fig. 7(b), the number of collisions among SUs averaged over $U = \{1, 2, 3, 4\}$ are compared. Since, collision cause the waste of battery power required for tasks related to data processing and transmission, hardware reconfiguration etc., number of collisions should be minimal. Numerically, SUs employing the proposed DMP, the existing DMP in [3] using BUCB and KLUCB, DLF suffers 58.5, 67.2, 68, 62% less collisions than [3], respectively. The number of collisions in the proposed DMP are slightly higher than BUCB and KLUCB algorithm based DMPs and DLF. This is mainly due to the proposed frequency band clustering and rank based approach. Also the difference is not substantial considering the probability of collision in the two-stage DMP is double than that of single-stage DMP as in two-stage DMP, frequency bands are selected in two sub-slots and there is equal possibility of collision among the SUs in each sub-slot. This reduction in number of collisions in the proposed DMP is due to smart division of frequency bands which eventually leads to fewer number of collisions. Slightly higher number collisions than DMP in [20] can be considered as the penalty incurred to achieve higher average spectrum utilization (i.e. number of collision free transmission opportunities) which is the main motivation behind cognitive radio network.

6 Experimental results and analysis

Experimental results to validate and compare the proposed DMP with the ρ^{RAND} [3] on the proposed testbed is presented in this section. The comparison is limited to two

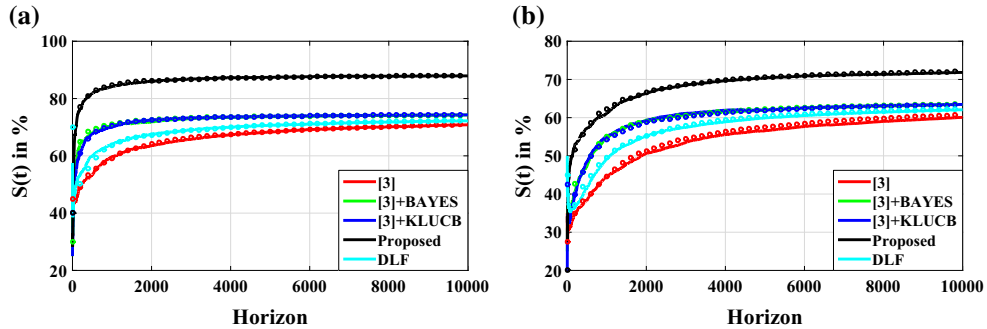

Fig. 5 Plots of number of collision free transmissions, $S(t)$ in % w.r.t. genie-aided DMP for Case 1 and Case 3 with **a** $U = 2$, **b** $U = 4$. *Solid lines* correspond to Case 1 while *marker* corresponds to Case 3

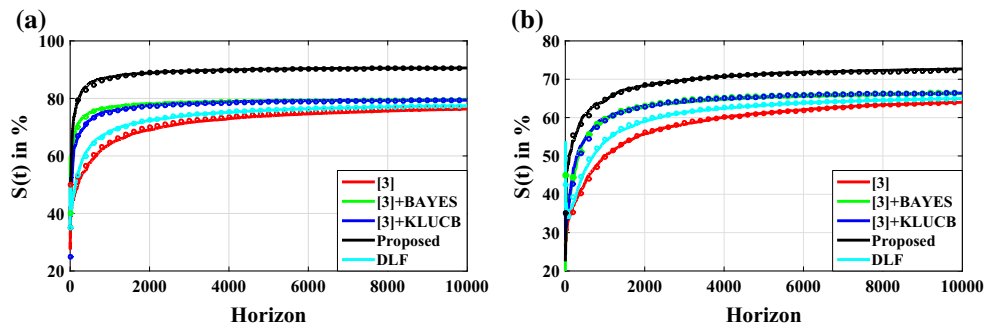

Fig. 6 Plots of number of collision free transmissions, $S(t)$ in % w.r.t. genie-aided DMP for Case 2 and Case 4 with **a** $U = 2$, **b** $U = 4$. *Solid lines* correspond to Case 2 while *marker* corresponds to Case 4

DMPs due to speed and bandwidth constraints of Matlab/Simulink and USRP. Due to the hardware constraints,the DMP in [19, 20] i.e. DLF is not included in the comparison plot. For experimental results, consider $C = 8$ with two different sets of P_{avail} same as those in Case 1 and Case 2 in Sect. 5. For $C = 8$ and transmission bandwidth of 1 MHz, the frequency band bandwidth is 125 KHz since $C = 8$. All the numerical results shown in this Section are obtained by averaging the values over 10 independent experiments on the proposed USRP testbed over a time horizon of 2000 iterations i.e. 2000 time slots for each SU is considered for each experiment and one time slot corresponds to one second. Similar to the simulated results, all SUs implement the same DMP but do not communicate among them.

The plots for comparison of collision free transmissions in [3] with UCB, BUCB and KLUCB algorithms and the proposed DMP are shown in Figs. 8 and 9. For Case 1, Fig. 8(a), (b) show the number of collision free transmissions, $S(t)$, in % with respect to genie-aided DMP for $U = 2$ and $U = 4$, respectively. Similarly, for Case 2, Fig. 9(a), (b) show the number of collision free transmissions in % with respect to genie-aided DMP for $U = 2$ and $U = 4$, respectively. From Figs. 8 and 9, it can be observed that the DMPs using KLUCB [26] and BUCB [4, 24] algorithms perform better than that of the UCB algorithm based DMP [3, 29] and also the proposed DMP outperforms all the existing DMPs.

Figure 10(a) shows the number of collision free transmissions in % w.r.t. genie-aided DMP averaged for $U = \{1, 2, 3, 4\}$. Being a two-stage approach, the proposed DMP offers higher number of transmission opportunities and thus performs significantly better than the existing DMP in [3] for all cases as evident from Fig. 10(a). Also, the proposed two- stage Bayesian MAB is proved to be better

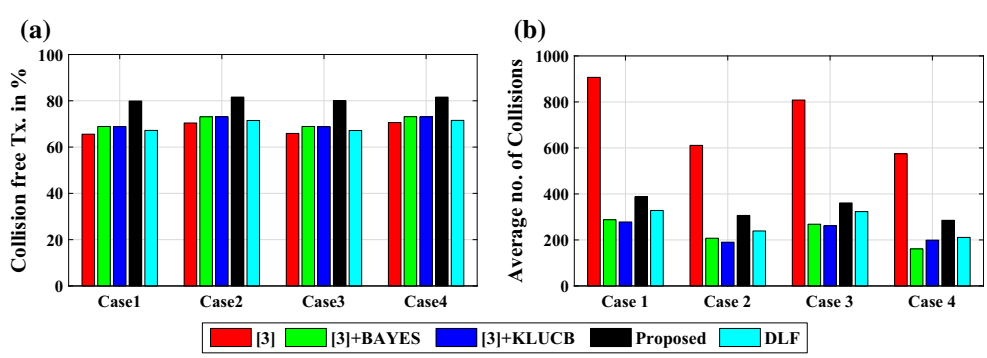

Fig. 7 **a** Collision free transmissions in % w.r.t. to genie-aided DMP, and **b** average number of collisions for different DMPs

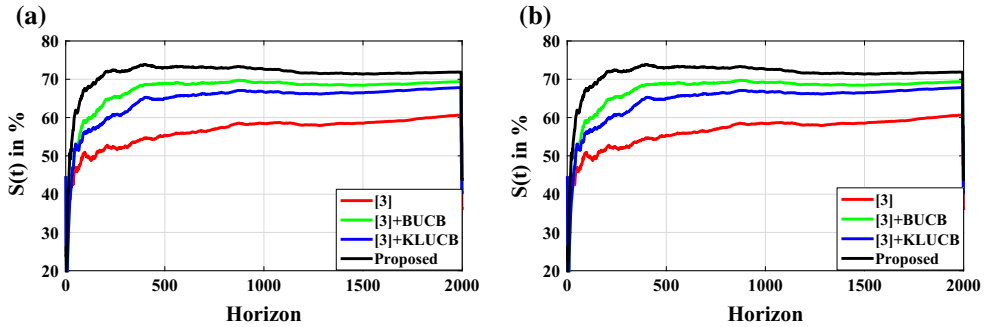

Fig. 8 Plots of number of collision free transmissions, $S(t)$ in % w.r.t. genie-aided DMP for Case 1 with **a** $U = 2$, **b** $U = 4$

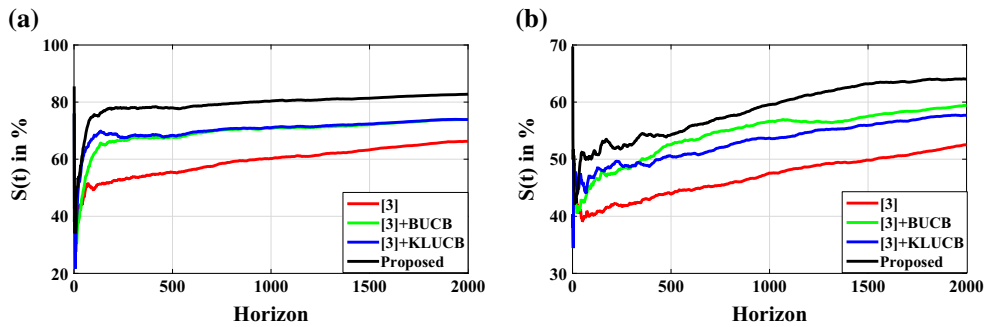

Fig. 9 Plots of number of collision free transmissions, $S(t)$ in % w.r.t. genie-aided DMP for Case 2 **a** $U = 2$, **b** $U = 4$

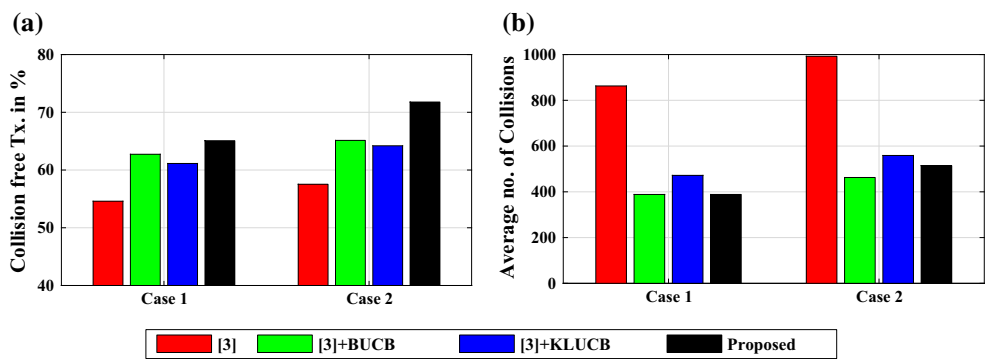

Fig. 10 **a** Collision free transmissions (Tx.) in % w.r.t. to genie-aided DMP, and **b** average number of collisions for different DMPs

choice over the existing DMPs for OSA in multi-user decentralized networks. Numerically, average spectrum utilization because of the primary users was only 55%. DMP in [3] using UCB, BUCB, KLUCB and proposed DMP have increased spectrum utilization to 79.5, 83.2, 82.5 and 84.3% respectively in comparison to the 55% spectrum utilization by the primary user. This means that the improvement in average spectrum utilization because of the proposed DMP (53.3%) is about 9% more than that due to [3] (44.5%). It verifies that the proposed DMP increases the average spectrum utilization and hence, proves to be better in comparison to the existing DMPs for different traffic distributions. One of the reason for superior performance of the proposed policy is the two stage approach which offers higher number of transmission opportunities. However, another important reason is the clustering of frequency bands for first access and second access in order to maximize the number of successful transmission in the first attempt.

Due to the proposed frequency band clustering and rank based approach, in Fig. 10(b), the number of collisions suffered by all SUs averaged over $U = \{1, 2, 3, 4\}$ are compared for frequency band distributions in Case 1 and Case 2. Numerically, SUs employing the proposed DMP, the existing DMP in [3] using BUCB and KLUCB suffers 54.9, 43.6 and 53.9% less collisions than [3], respectively. Thus,reduction of number of collisions in the proposed DMP makes it appropriate for resource constrained battery operated SU terminals. The computational complexity of KLUCB is the highest and it is based on optimization

approach whereas the complexity of BUCB is slightly lesser than that of UCB [24]. On the basis of the experimental results, we argue that in multi-user decentralized network, the proposed DMP for OSA using the Bayesian MAB algorithm is superior.

7 Conclusions and future works

In this paper, a new two-stage decision making policy (DMP) using Bayesian Upper Confidence Bound algorithm has been proposed for opportunistic spectrum access in multi-user decentralized wireless networks. The proposed DMP outperforms the existing policy in terms of average spectrum utilization and number of collisions among secondary users. Furthermore, we showed that sensing errors do not have any significant effect on the DMPs. From the hardware implementation of proposed policy on USRP testbed, it has also been shown that the experimental results closely match the simulated results. Future work include the design of DMP for large size heterogeneous networks and extension of DMP for RF energy harvesting enabled secondary user terminals.

Acknowledgements The authors thank the Department of Science and Technology (DST), Government of India for the INSPIRE fellowship in support of this work.

References

1. Asadi, A., Wang, Q., & Mancuso, V. (2014). A survey on device-to-device communication in cellular networks. *IEEE Communications Surveys and Tutorials*, *16*(4), 1801–1819.
2. Palicot, J., Zhang, H., & Moy, C. (2013). On the road towards green radio. *URSI Radio Science Bulletin*, *347*, 40–56.
3. Ananadkumar, A., Michael, N., Tang, K., & Swami, A. (2011). Distributed algorithms for learning and cognitive medium access with logarithmic regret. *IEEE Journal on Selected Areas in Communications*, *29*(4), 731–745.
4. Darak, S. J., Zhang, H., Palicot, H., & Moy, C. (2015). An efficient policy for D2D communications and energy harvesting in cognitive radios: Go Bayesian. In *23rd European Signal Processing Conference (EUSIPCO)*. France: Nice.
5. Kolodzy, P., et al. (2001). Next generation communications. *Kickoff meeting*, DARPA.
6. Chen, L., Iellamo, S., Coupechoux, M., & Godlewski, P. (2011). Spectrum auction with interference constraint for cognitive radio networks with multiple primary and secondary users. *Wireless Networks*, *17*(5), 1355–1371.
7. Zhao, N., Yu, F. R., Sun, H., Yin, H., Nallanathan, A., & Wang, G. (2015). Interference alignment with delayed channel state information and dynamic AR-model channel prediction in wireless networks. *Wireless Networks*, *21*(4), 1227–1242.
8. Zhao, N., Yu, F. R., Sun, H., & Li, M. (2016). Adaptive power allocation schemes for spectrum sharing in interference alignment (IA)-based cognitive radio networks. *IEEE Transactions on Vehicular Technology*, *65*, 3700–3714.
9. Su, H., & Zhang, X. (2008). Cross-layer based opportunistic MAC protocols for QoS provisionings over cognitive radio wireless networks. *IEEE Journal on Selected Areas in Communications*, *26*(1), 118–129.
10. Tumuluru, V. K., Wang, P., & Niyato, D. (2011). A novel spectrumscheduling scheme for multichannel cognitive radio network and performance analysis. *IEEE Transactions on Vehicular Technology*, *60*(4), 1849–1858.
11. Rashid, M., Hossain, M., Hossain, E., & Bhargava, V. K. (2009). Opportunistic spectrum scheduling for multiuser cognitive radio: A queueing analysis. *IEEE Transactions on Wireless Communications*, *8*(10), 5259–5269.
12. Zhao, Q., Tong, L., Swami, A., & Chen, Y. (2007). Decentralized cognitive MAC for opportunistic spectrum access in ad hoc networks: A POMDP framework. *IEEE Journal on Selected Areas in Communications*, *25*(3), 589–600.
13. Zhao, Q., Krishnamachari, B., & Liu, K. (2008). On myopic sensing for multi-channel opportunistic access: Structure, optimality, and performance. *IEEE Transactions on Wireless Communications*, *7*(12), 5431–5440.
14. Ahmad, S., Liu, M., Javidi, T., Zhao, Q., & Krishnamachari, B. (2008). Optimality of myopic sensing for multi-channel opportunistic access. *IEEE Transactions on Information Theory*, *55*(9), 4040–4050.
15. Liu, K., Zhao, Q., & Krishnamachari, B. (2010). Dynamic multichannel access with imperect channel state detection. *IEEE Transactions on Signal Processing*, *58*(5), 2795–2808.
16. Liu, K., & Zhao, Q. (2010). Distributed learning in cognitive radio networks: Multi-armed bandit with distributed multiple players. In *Proceedings of the IEEE International Conference on Acoustics, Speech, Signal Processing (ICASSP)* (pp. 3010–3013).
17. Liu, K., & Zhao, Q. (2010). Distributed learning in multi-armed with multiple player. *IEEE Transactions on Signal Processing*, *58*(11), 5665–5681.
18. Zandi, M., Dong, M., & Grami, A. (2013). Decentralized spectrum learning and access adapting to primary channel availability distribution. In *Proceedings on IEEE International Workshop on Signal Processing Advances in Wireless Communications (SPAWC)*, Darmstadt, Germany.
19. Gai, Y., & Krishnamachari, B. (2011). Decentralized online learning algorithms for opportunistic spectrum access. In *Proceedings on IEEE Global Communication Conference (GLOBECOM)* (pp. 1–6).
20. Gai, Y., & Krishnamachari, B. (2014). Distributed stochastic online learning policies for opportunistic spectrum access. *IEEE Transactions on Signal Processing*, *62*(23), 6184–6193.
21. Darak, S. J., Zhang, H., Palicot, J., & Moy, C. (2017). Decision making policy for RF energy harvesting enabled cognitive radios in decentralized wireless networks. *Digital Signal Processing*, *60*, 33–45.
22. Jouini, W., Ernst, D., Moy, C., & Palicot, J. (2011). Upper confidence bound algorithm for opportunistic spectrum access with sensing errors. In *Proceedings of International ICST Conference on Cognitive Radio Oriented Wireless Networks and Communications*, Osaka, Japan.
23. Auer, P., Cesa-Bianchi, N., & Fisher, P. (2002). Finite-time analysis of the multiarmed bandit problem. *Machine Learning*, *47*(2), 236–256.
24. Kaufmann, E., Cappé, O., Garivier, A. (2011). On the efficiency of Bayesian bandit algorithms from a frequentist point of view. In *Neural Information Processing Systems (NIPS)*.
25. Agrawal, S., Goyal, N (2013). Further optimal regret bounds for Thompson sampling. In *16th International Conference on Artificial Intelligence and Statistics (AISTATS)*, Scottsdale, USA.

26. Garivier, A., Cappé, O. (2011). The KL-ucb algorithm for bounded stochastic bandits and beyond. In *Conference On Learning Theory (COLT)* (pp. 359-376), Budapest, Hungary.
27. Lai, T., & Robbins, H. (1985). Asymptotically efficient adaptive allocation rules. *Advances in Applied Mathematics*, *6*(1), 4–22.
28. Agrawal, R. (1995). Sample mean based index policies with O(log n) regret for the multi-armed bandit problem. *Advances in Applied Probability*, *27*(4), 1054–1078.
29. Darak, S. J., Dhabhu, S., Moy, C., Zhang, H., Palicot, J., & Vinod, A. P. (2015). Low complexity and efficient dynamic spectrum learning and tunable bandwidth access for heterogeneous decentralized cognitive radio networks. *Digital Signal Processing*, *37*, 13–23.
30. Lai, J., Dutkiewicz, E., Liu, R. P., & Vesilo, R. (2015). Opportunistic spectrum access with two channel sensing in cognitive radio networks. *IEEE Transactions on Mobile Computing*, *14*(1), 126–138.
31. Darak, S. J., Nafkha, A., Moy, C., & Palicot, J. (2016). Is Bayesian multi-armed bandit algorithm superior?: Proof-of-concept for opportunistic spectrum access in decentralized networks. In *Proceedings of 11th International Conference on Cognitive Radio Oriented Wireless Networks (CROWNCOM)* (pp. 104–115), Grenoble, France.
32. Bahamou, S., & Nafkha, A. (2013). Noise uncertainty analysis of energy detector: Bounded and unbounded approximation relationship. In *21th European Signal Processing Conference (EUSIPCO)* (pp. 1–4), Marrakech, Morocco.

Rohit Kumar received his B.Tech. in Electronics and Communication Engineering in 2010 and M.Tech. in Digital Communication in 2012, both from Guru Gobind Singh Indraprastha University, Delhi, India. He is currently pursuing the Ph.D. degree program in Electronics and Communication Enginnering at National Institute of Technology Delhi.

Sumit J. Darak received his B.E. degree in Electronics and Telecommunications Engineering from Pune University, India in 2007, and Ph.D. degree from the School of Computer Engineering, Nanyang Technological University (NTU), Singapore in 2013. He is currently an Assistant Professor at Indraprastha Institute of Information Technology, Delhi (IIITD), India. Prior to that, he was working as Assistant System Engineer in Tata Consultancy Services (TCS), Pune, India from September 2007 to December 2008. From March 2013 to November 2014, he was pursuing postdoctoral research at the CominLabs Excellence Center, Université Europèenne de Bretagne (UEB) and Supélec, Rennes, France. Dr. Sumit has been awarded India Governments "DST Inspire Faculty Award" which is a prestigious award for young researchers under 32 years age. His current research interests include non-uniform sampling, design of area and power efficient variable digital filters and reconfigurable filter banks for multi–standard wireless communication transceivers, decision making and learning algorithms for various wireless communication applications such as D2D communications and RF energy harvesting etc.

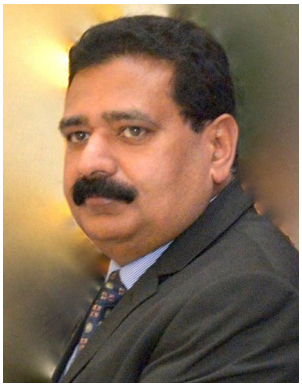

Ajay K. Sharma received his BE in Electronics and Electrical Communication Engineering from Punjab University Chandigarh, India in 1986, M.S. in Electronics and Control from Birla Institute of Technology (BITS), Pilani in the year 1994 and Ph.D. in Electronics Communication and Computer Engineering in the year 1999. Currently he is working as Director at National Institute of Technology (An Institute of National Importance), Ministry of Human Resource Development, Government of India, New Delhi since October 2013. His Ph.D. thesis was on "Studies on Broadband Optical Communication Systems and Networks". After serving various organizations from 1986 to 1995, he has joined National Institute of Technology (Erstwhile Regional Engineering College) Jalandhar as Assistant Professor in the Department of Electronics and Communication Engineering in the year 1996. From November 2001, he has worked as Professor in the ECE department and thereafter he has worked as Professor in Computer Science and Engineering from 2007 to 2013 in the same institute. His major areas of interest are broadband optical wireless communication systems and networks, dispersion compensation, fiber nonlinearities, optical soliton transmission, WDM systems and networks, Radio-over-Fiber (RoF) and wireless sensor networks and computer communication. He has published 290 research papers in the International/National Journals/Conferences and 12 books. He has supervised 22 Ph.D. and 52 M.Tech. theses. He has completed two R & D projects funded by Government of India and one project is ongoing. He was associated to implement the World Bank project of 209 Million for TEQIP-I programme of the institute. He has been appointed as member of technical Committee on Telecom under International Association of Science and Technology Development (IASTD) Canada for the term 2004-2007 and he is Life Member of Optical Society of America, USA, (LM ID-361253), Computer Society of India, Mumbai, India, (LM-Associate: 01099298), Advanced Computing & Communications Society, Indian Institute of Science, Bangalore, India, (L284M1100306), SPIE, USA, (ID: 619838), Indian Society for Technical Education (I.S.T.E.), New Delhi, India, (LM-11724), Fellow The Institution of Electronics and Telecommunication Engineers (IETE), (F-224647).

Rajiv Tripathi received the B.E. degree in Electronics and Communication engineering from Agra University, 2002, M.Tech. degree in Digital Communication from UP Technical University, 2006, and completed his Ph.D. degree in Electrical Engineering from Indian Institute of Technology (IIT) , Kanpur in 2013. Presently working as Assistant Professor at National Institute of Technology, Delhi (NIT, Delhi) His current research interests lie in the area of energy effcient routing and clustering in wireless sensor networks. Rajiv K. Tripathi is a member of the IEEE. He is Lifetime member of Institution of Communication Engineers and Information Technology, India.