Optik 125 (2014) 2062–2065

Contents lists available at ScienceDirect

Optik

journal homepage: www.elsevier.de/ijleo

Performance improvement on OVSB based WDM RoF-EPON link using SOA with DCF and FBG

Baljeet Kaur[a,*], Ajay K. Sharma[b], Vinod Kapoor[c]

[a] Department of Electronics and Communication Engineering, Guru Nanak Dev Engineering College, Ludhiana, Punjab, India
[b] Department of Computer Science and Engineering, National Institute of Technology, Jalandhar, Punjab, India
[c] Department of Electronics and Communication Engineering, National Institute of Technology, Hamirpur, Himachal Pradesh, India

ARTICLE INFO

Article history:
Received 6 May 2013
Accepted 28 September 2013

Keywords:
Optical Network Unit
Optical Line Terminal
BER
EPON
RoF

ABSTRACT

Performance of four channel WDM RoF-EPON link based on OVSB transmission using SOA is enhanced by compensating dispersion and FWM with DCF and FBG by 10.95% for equal channel spacing and further improvement has been shown up to 23.61% by using unequal spacing for the same transmission link. The performance enhancement by using DCF and FBG is ascertained by evaluating *Q* factor and eye opening.

1. Introduction

Over the past decade there has been an exponential increase in the number of mobile phone subscribers. New wireless subscribers are signing up with an increasing demand of more capacity for ultra-high rate data transfer. Efforts are being made to increase the information carrying capacity. In optical domain, wavelength division multiplexing (WDM) is being implemented. Also, an interesting approach to integrate optical fiber networks and wireless networks is provided by the radio-over-fiber (RoF) networks. RoF technique for WDM-EPON has been regarded as a promising system that can meet the increase and varied demands of broadband multimedia services for wireless users [1–5]. During last few years, study of transmitter for advanced modulation formats has been a hot topic in optical communications research and development. The use of advanced modulation formats aims at reducing the network costs by allowing high bit rate per channel and increasing the spectral efficiency. Optical signals with one suppressed sideband have been found to be an attractive modulation format for WDM networks [6]. An all-optical vestigial sideband generation method using an SOA is a novel method. This method is based on SPM nonlinearity in SOA. This is the first all-optical sideband suppression scheme which does not require detuned optical filtering for the input signal or Hilbert transforms of the information signal. The operation principle of the all-optical generation method for OVSB is based on temporal frequency chirp, induced during amplification of signal in SOA. To obtain sideband suppression, the frequency chirp magnitude must be optimized. The chirp depends on the magnitude and response time of the SOA phase modulation. This can be controlled by the power of data or continues wave signals and/or injection current of SOA [7–9]. For simulation the influence of first parameter, i.e. power of CW is considered.

In this paper we have compensated dispersion and FWM with DCF and FBG [10–13] on OVSB based WDM RoF-EPON link using SOA. For downlink four VSB optical carriers have been generated by using SOA. BER for both downlink and uplink are analyzed over a transmission distance of 20 km.

This paper is organized as follows. The Optical VSB transmission model with DCF and FBG has been mentioned in Section 2 and then the results are compared with and without DCF and FBG in Section 3 and finally the conclusions drawn in Section 4.

2. Simulation setup

Simulation is done to compensate dispersion and FWM on OVSB based WDM RoF-EPON link using DCF and FBG as shown in Fig. 1. All parameters for design are taken according to IEEE 802.3 ah standard [14]. Electrical pulse (NRZ) format is used for the radio signal input and for modulation CW laser is used with 0 dBm power. Four channels with equal and unequal channel spacing and four CW pump

* Corresponding author.
E-mail addresses: baljeetkaur@gndec.ac.in (B. Kaur), sharmaajayk@nitj.ac.in (A.K. Sharma), kapoor@nith.ac.in (V. Kapoor).

0030-4026/$ – see front matter © 2013 Elsevier GmbH. All rights reserved.
http://dx.doi.org/10.1016/j.ijleo.2013.09.073

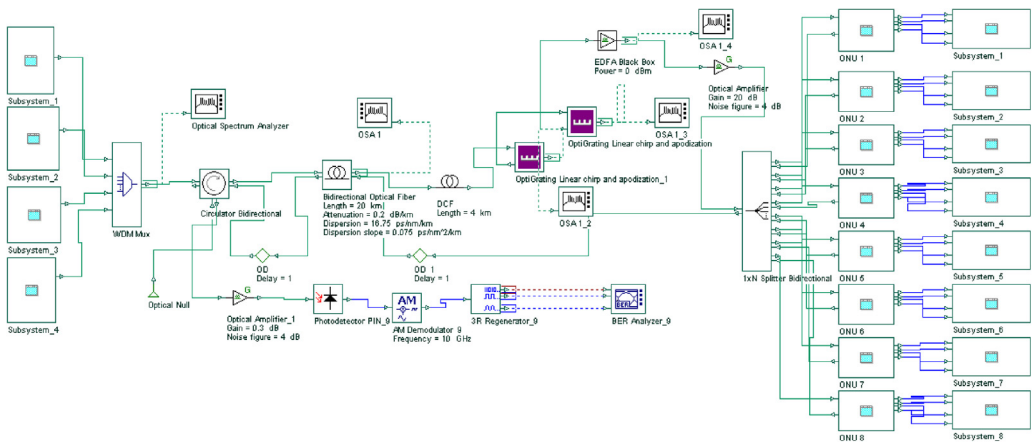

Fig. 1. OVSB model for WDM-RoF EPON link with DCF + FBG.

signals have been used in the design. Here eight ONUs are connected with OLT via an optical fiber access network employing WDM technology. A 20-km of single mode fiber (SMF) was used for the transmission of data. A dual-arm chirp-free Mach-Zehnder Modulator (MZM) is driven by a CW laser signal and the information signal modulated at a fixed frequency of 10 GHz. This signal generated by the MZM is coupled with a pump signal. Both signals are polarization controlled due to the SOA polarization dependence. SOA is a bulk device, operated with 0.0005 m length and 0.2 A injection current. The four CW Laser diodes have an operating range of 1552.5, 1551.72, 1550.91 and 1550.11 nm and two wavelengths 1550 and 1550.8 nm for CW pump signals are taken for the transmission. The signal optical power of 3.5 dBm is taken for the CW pump [6].

Design of subsystem1 and o/p spectrums of ODSB and OVSB are shown in Figs. 2 and 3, respectively.

Similarly four channels with unequal channel spacing having 1552.52, 1551.31, 1550.51 and 1550.11 nm wavelengths are transmitted with 1550 and 1550.8 nm CW pump signals. WDM MUX is launched to combine these carriers for further transmission. In order to compensate dispersion and FWM, DCF and two FBGs have been used. DCF reduced 1 dBm power of the output signal where as first FBG removed the signals greater than fourth channel wavelength and second FBG removed the signals less than first channel wavelength for equal and unequal channel spacing as shown in Figs. 4 and 5, respectively. After that output power is divided by using 1:8 splitter to eight ONUs and one ONU is consist of four receivers so total 32 users can receive the signal simultaneously. At the receiver, the optical signal is detected using a PIN photodetector. The detected electrical output is passed through a band pass RC filter having center frequency of 10 GHz. Finally, the signal is demodulated using an AM demodulator as shown in Fig. 6. Similarly 0 dBm powers is combined through combiner from eight ONUs and transmitted to OLT.

From Figs. 4 and 5, we have obtained sideband suppression in OVSB is 2 dBm.

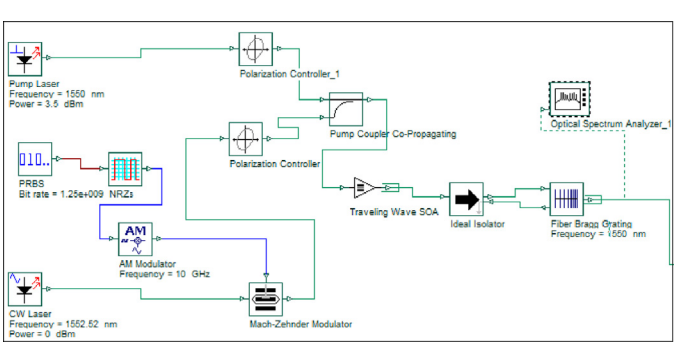

Fig. 2. Generation of OVSB signal.

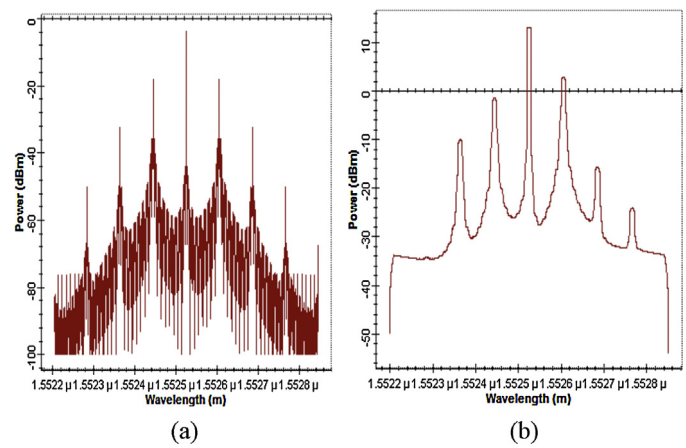

Fig. 3. Output spectrums of subsystem1: (a) ODSB and (b) OVSB.

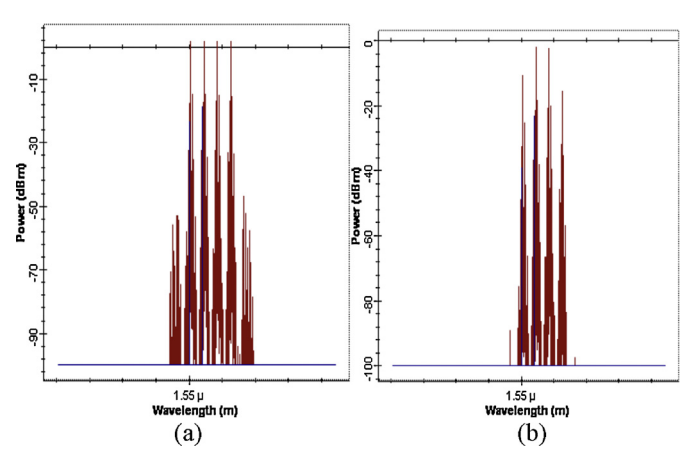

Fig. 4. OVSB for equal spacing: (a) before FBG and (b) after FBG.

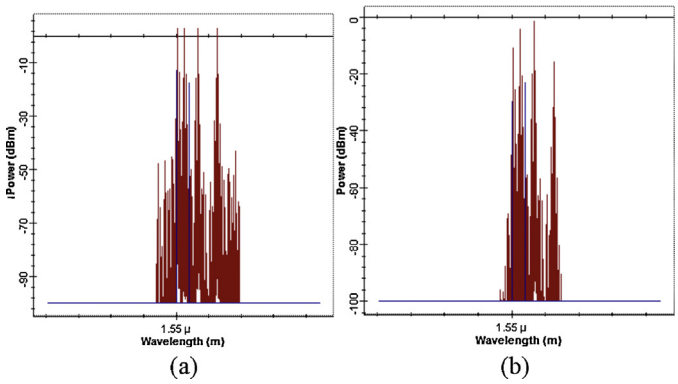

Fig. 5. OVSB for unequal spacing: (a) before FBG and (b) after FBG.

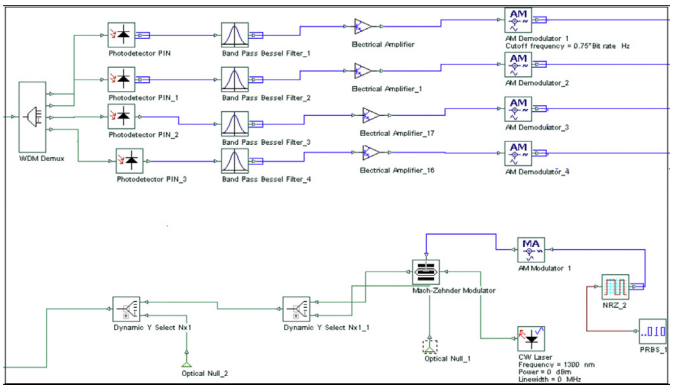

Fig. 6. Designing inside ONU1.

For analysis, different analyzers are attached both at transmitter and receiver side. After ONU1, we have connected four 3R regenerators and four BER analyzers as shown in Fig. 7.

3. Results and discussions

The simulation setup of Fig. 1 is used to compensate dispersion and FWM with DCF and FBG. The ODSB signal is generated through dual-arm MZM and then for OVSB it is coupled to a CW pump signal. For the data rates of 1.25 Gb/s the CW Laser has 0 dBm output power and the pump laser has 3.5 dBm output power. The extinction ratio of the input signal is 15 dB. Two polarization controllers are used to adjust the polarization of both signals due to the SOA polarization dependence. The SOA is employed with 0.0005 m length and 0.2 A injection current. For analysis, eye diagrams are compared for ODSB and for OVSB transmissions at ONUs. Same receiver is used for detection and demodulation of both OVSB and ODSB signals. Eye patterns at ONU1 (at Rx4) for ODSB, OVSB, and OVSB with DCF and FBG for equal and unequal channel spacing are shown in Fig. 8. For

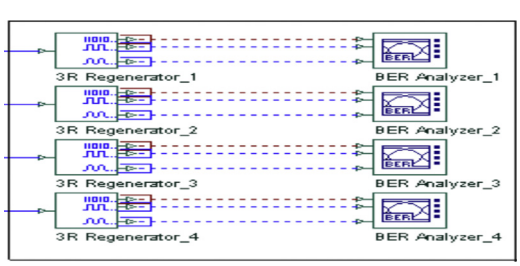

Fig. 7. Measurement blocks after ONU1.

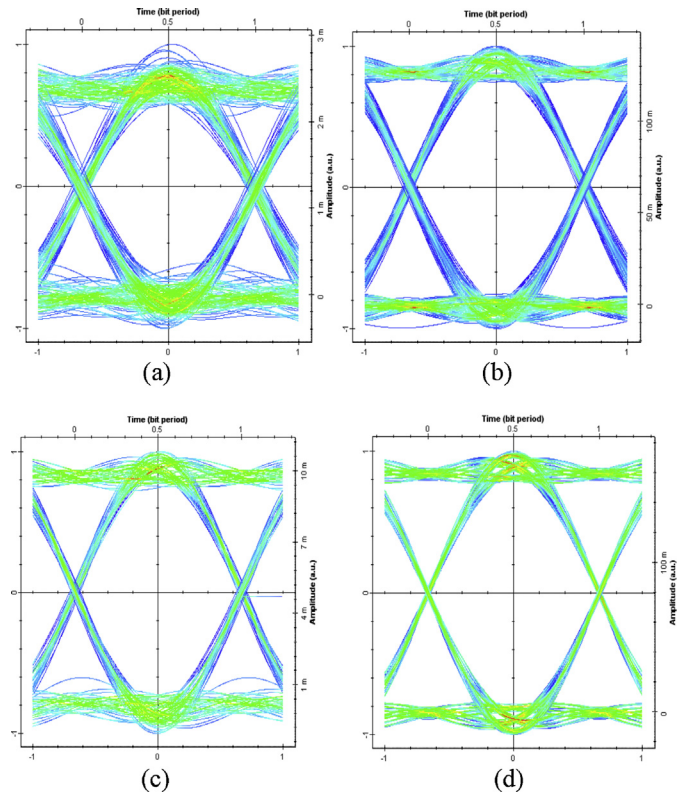

Fig. 8. BER at Rx4: (a) ODSB, (b) OVSB, (c) OVSB with DCF + FBG for equal channel spacing, and (d) OVSB with DCF + FBG for unequal channel spacing.

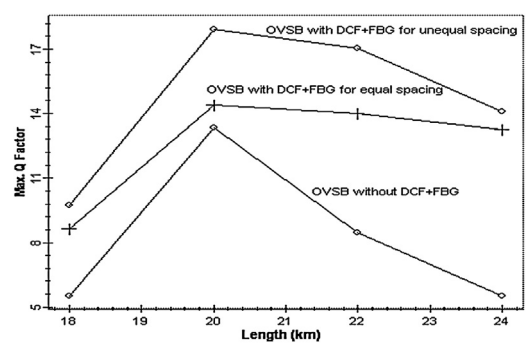

Fig. 9. Q factor at different optical length.

comparing the results, Q factor is also obtained for different lengths of optical fiber and different input powers of Tx1. Results at Rx4 for different lengths and optical power is shown in Figs. 9 and 10, respectively.

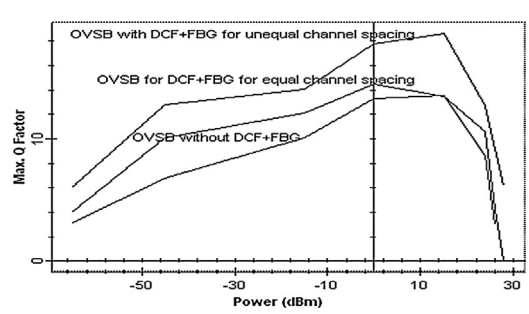

Fig. 10. Q factor at different optical power of Tx1.

Table 1
Q factor at different bit rates.

Bit rate (Gbps)	*Q* factor (OVSB)	*Q* factor (OVSB + DCF + FBG for equal spacing)	*Q* factor (OVSB + DCF + FBG for unequal spacing)
1.25	13.05	14.48	17.90
2.25	12.37	17.12	19.08
5	9.602	10.17	11.57

By comparing the BER patterns of Fig. 8, we find that maximum eye opening is obtained to compensate dispersion and FWM with DCF and FBG for unequal spacing between the channels.

From Figs. 9 and 10 it can be concluded that OVSB with DCF + FBG for unequal channel spacing provides improved tolerance to chromatic dispersion due to which better *Q* factor is obtained at different power and lengths. It is also concluded that with use of unequal channel spacing as compared to equal channel spacing for compensation of FWM, the BER, *Q*-factor and eye-diagram showing a considerable improvement. Analysis has also been done at different bit rates as shown in Table 1.From Table 1, it is observed that OVSB generation with DCF and FBG for unequal channel spacing is also acceptable at 5 Gbps and gives better result as compare to equal channel spacing.

4. Conclusion

Simulation results have been reported at bit rate of 1.25, 2.25 and 5 Gbps for OVSB based WDM EPON-RoF link by compensating dispersion and FWM using DCF and FBG. As shown in Table 1, best results have been obtained at bit rate of 1.25, 2.25 and 5 Gbps for OVSB + DCF + FBG for unequal channel spacing. At bit rate of 1.25, 2.25 and 5 Gbps, there is improvement of 10.95%, 38.3% and 5.9% over OVSB and 23.61%, 11.44% and 13.7% over OVSB + DCF + FBG for equal channel spacing, respectively.

References

[1] B. Kaur, V. Kapoor, A.K. Sharma, Performance investigations on ethernet passive optical networks (EPONs), in: IEEE International Advance Computing Conference (IACC 2009), Patiala, India, 2009, March, pp. 3066–3069.
[2] R.A. Griffin, P.M. Lane, J.J. O'Reilly, Radio-over-fiber distribution using an optical millimeter-wave/DWDM overlay, in: Proc. OFC/IOOC 99, vol. 2, 1999, February, pp. 70–72.
[3] G.K. Chang, J. Yu, Z. Jia, Architecture and enabling technologies for super broadband radio-over-fiber optical-wireless access networks, in: IEEE International Conference, 2007, October, pp. 24–28, MWP.
[4] H.C. Kwon, Y.Y. Won, D.W. Lee, S.K. Han, WDM passive optical network with simultaneous wireline/wireless downlink transmission and wavelength reuse for uplink connection, in: International Conference 4, ICTON, 2007, August, pp. 9–11.
[5] R.A. Griffin, DWDM aspects of radio-over-fiber, in: Proc. LEOS 2000 Annual Meeting, vol. 1, 2000, November, pp. 76–77.
[6] D. Fonseca, A. Cartaxo, P. Monteiro, Adaptive optoelectronic filter for improved optical single sideband generation, IEEE Photon. Technol. Lett. 18 (January (2)) (2006) 415–417.
[7] T. Silveira, A.L.J. Teixeira, A.P.S. Ferreira, P.M.N.P. Monteiro, All-optical vestigial sideband generation using a semiconductor optical amplifier, IEEE Photon. Technol. Lett. 18 (21 November 2006) 2212–2214.
[8] T.G. Silveira, A.L.J. Teixeira, A.P.S. Ferreira, P.M.N.P. Monteiro, All optical vestigial sideband generation using counter propagating pumping in semiconductor optical amplifier, in: Proceedings of the International Quantum Electronics Conference, 2007, p. 1.
[9] T. Silveira, A. Ferreira, A. Teixeira, P. Monteiro, All-optical conversion to vestigial sideband through self-phase modulation in semiconductor optical amplifier, in: Proceedings of the IEEE International Conference, ICTON, 2009, pp. 1–4.
[10] M. Sieben, J. Conradi, D. Dodds, Optical single sideband transmission at 10 Gb/s using only electrical dispersion, J. Lightwave Technol. 17 (10) (1999) 1742–1749.
[11] A comparative analysis of WDM RoF-EPON link with and without DCF, in: International Conference on Mechanical, Electronics and Mechatronics Engineering (ICMEME'2012), March 17–18, 2012, pp. 31–34.
[12] V. Kapoor, B. Kaur, A.K. Sharma, A simulation study on WDM RoF-EPON link in the presence of four-wave mixing, in: Las Vegas International Academic Conference, 2011, pp. 259–264.
[13] B. Patnaik, P.K. Sahu, Optimization of four wave mixing effect in radio-over-fiber for a 32-channel 40-Gbps DWDM system, in: International Symposium on Electronic System Design, 2010, pp. 119–124.
[14] IEEE P802.3ah task force home page: http://www.ieee802.org/3/efm